8. Level 3 Repair

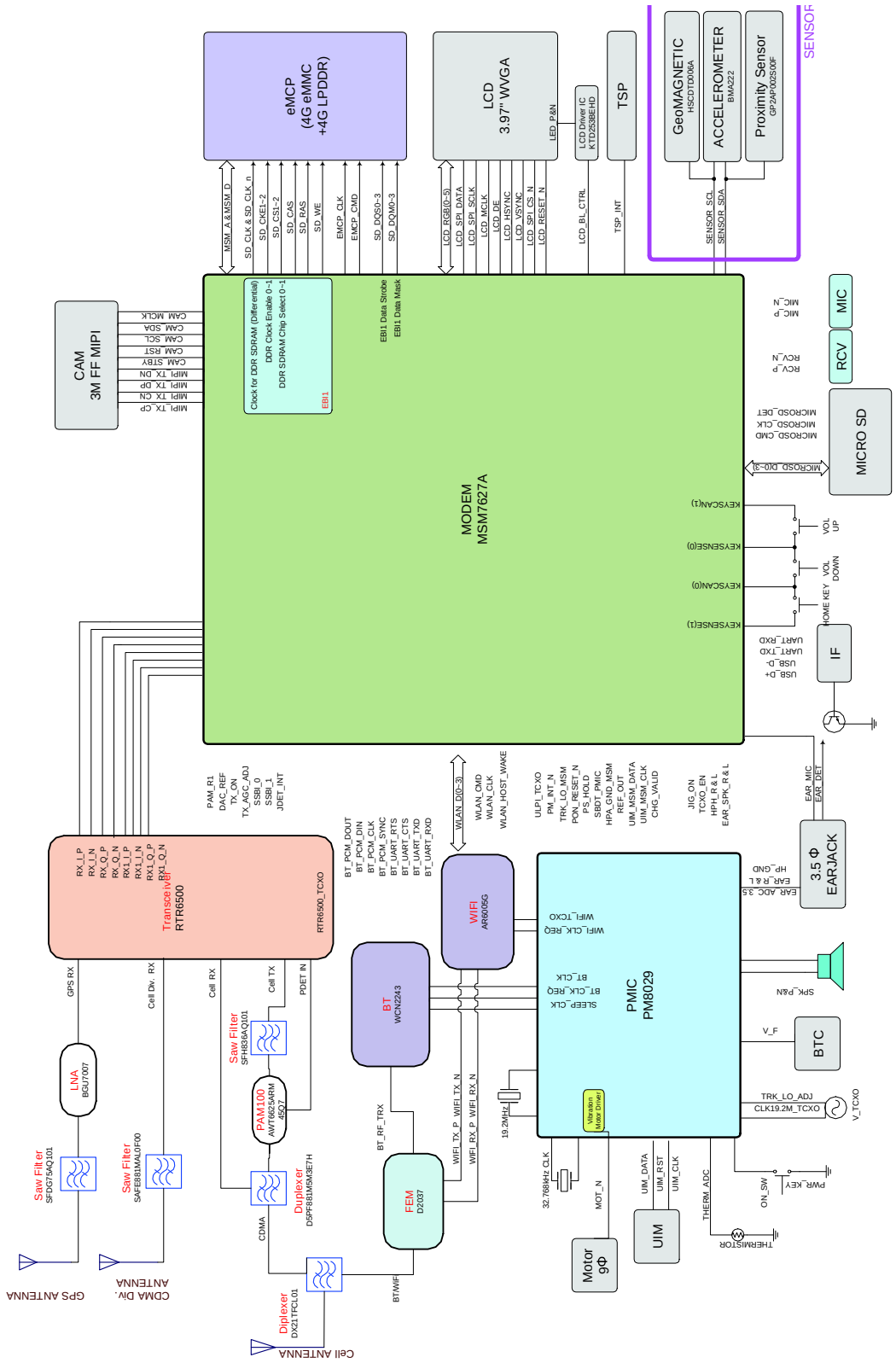

Confidential and proprietary-the contents in this service guide subject to change without prior notice.
Distribution, transmission, or infringement of any content or data from this document without Samsung's written authorization is strictly prohibited.

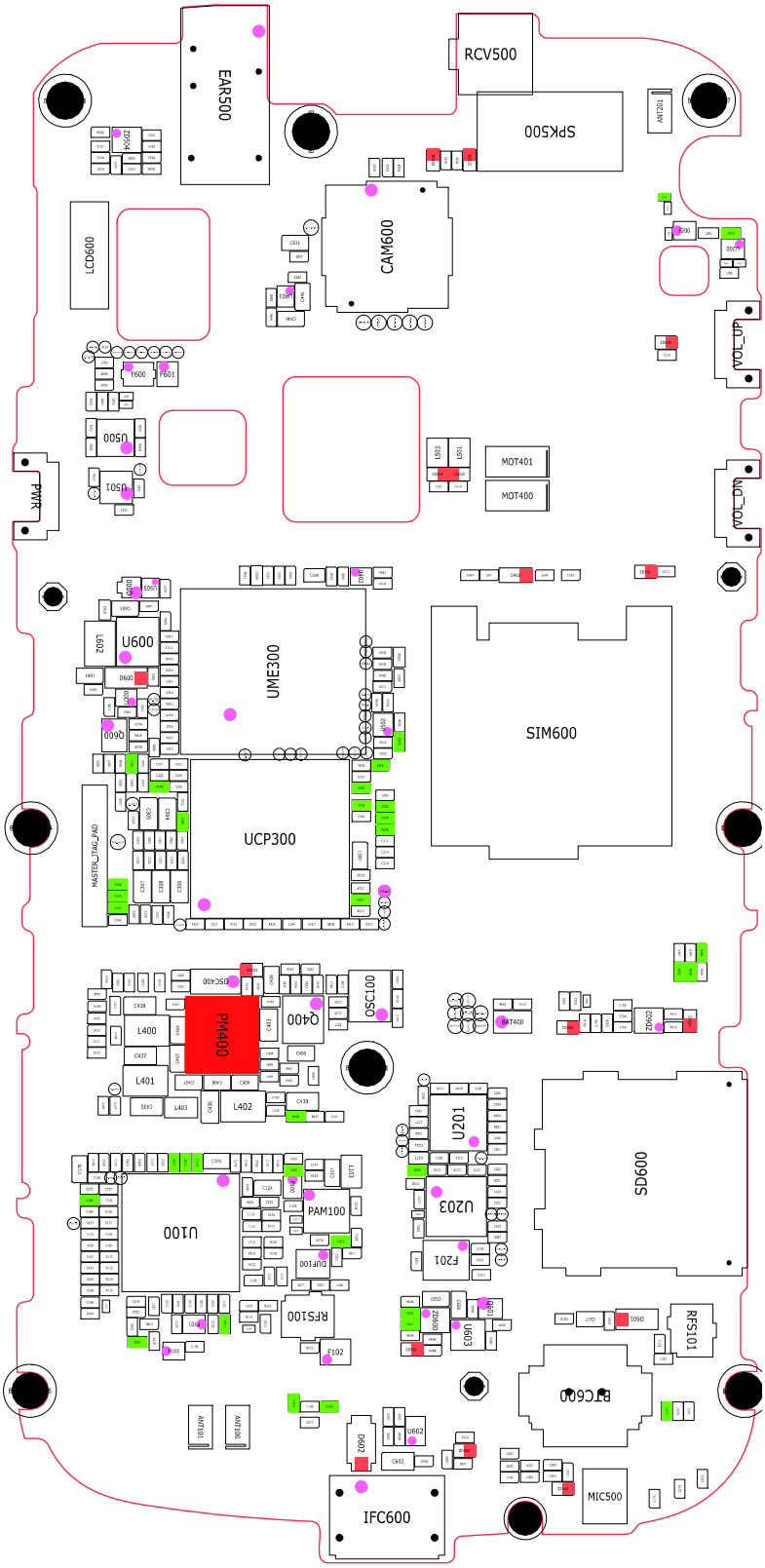

Confidential and proprietary-the contents in this service guide subject to change without prior notice.
Distribution, transmission, or infringement of any content or data from this document without Samsung's written authorization is strictly prohibited.

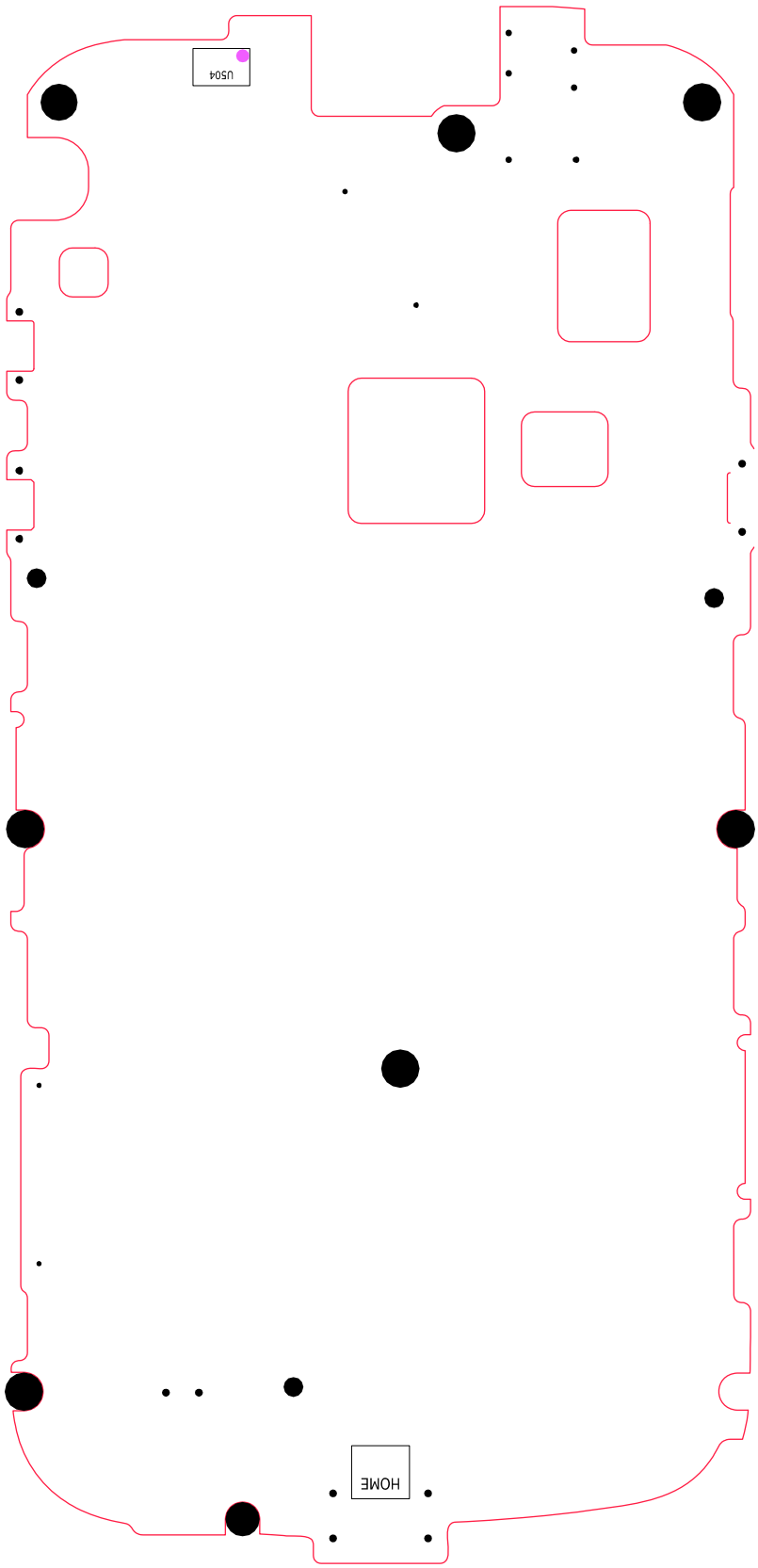

Confidential and proprietary-the contents in this service guide subject to change without prior notice.
Distribution, transmission, or infringement of any content or data from this document without Samsung's written authorization is strictly prohibited.

8-1. Power On

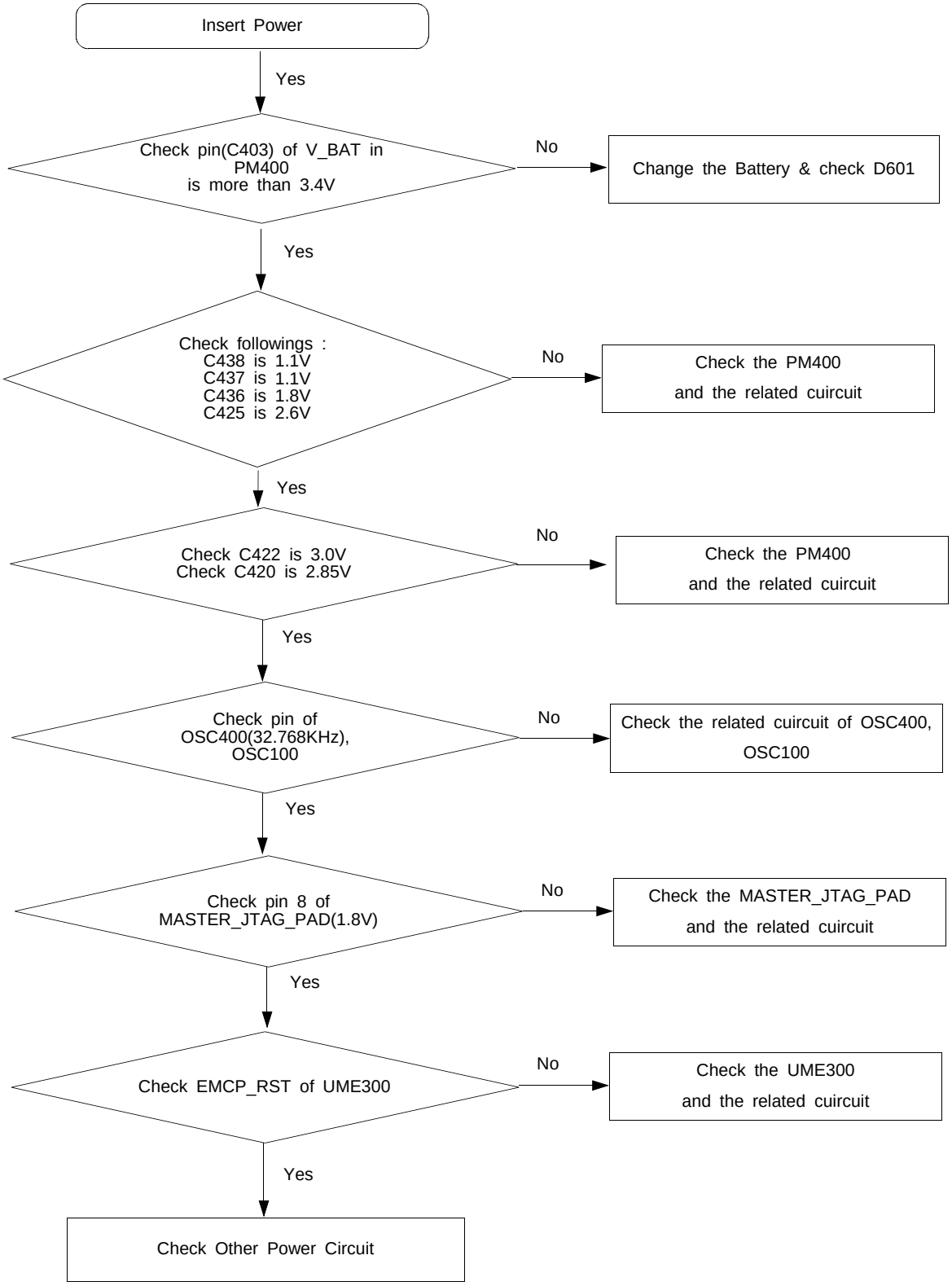

Confidential and proprietary-the contents in this service guide subject to change without prior notice.
Distribution, transmission, or infringement of any content or data from this document without Samsung's written authorization is strictly prohibited.

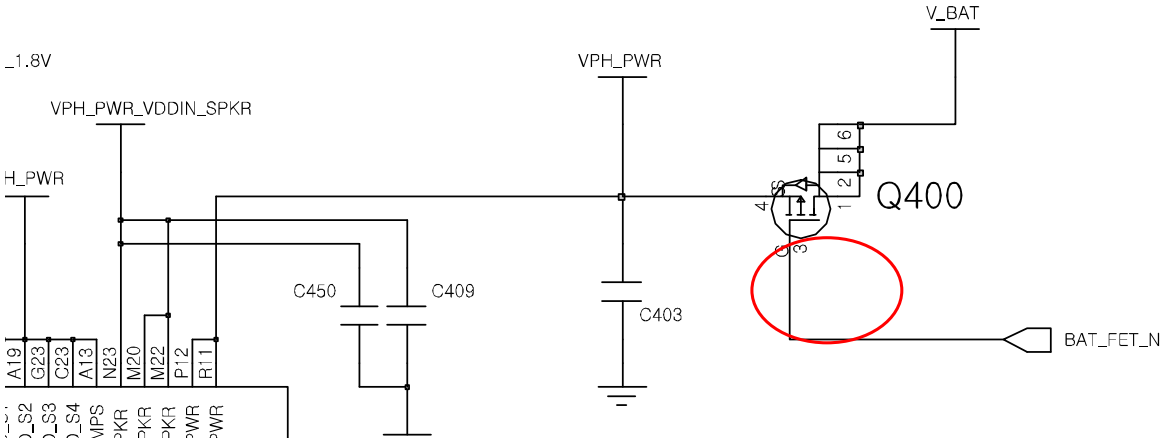

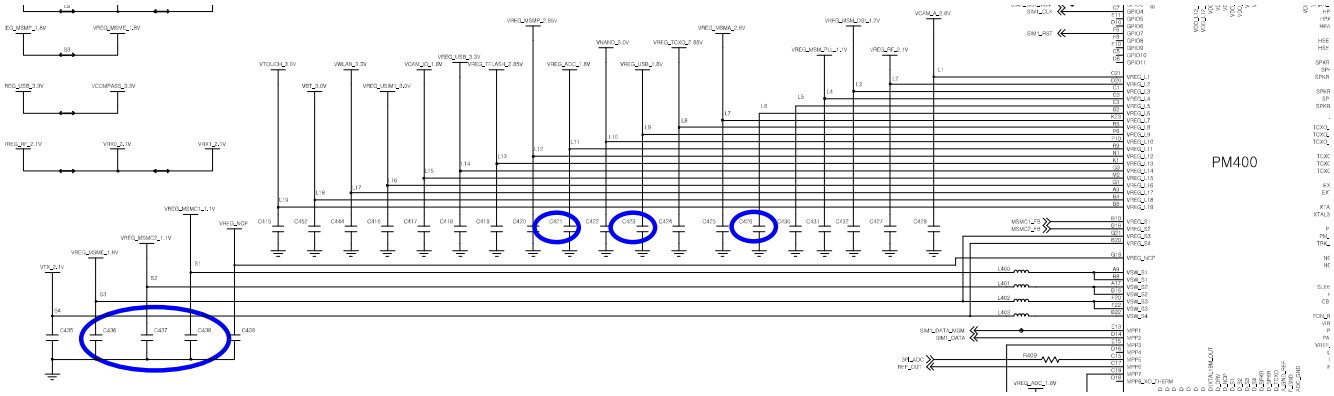

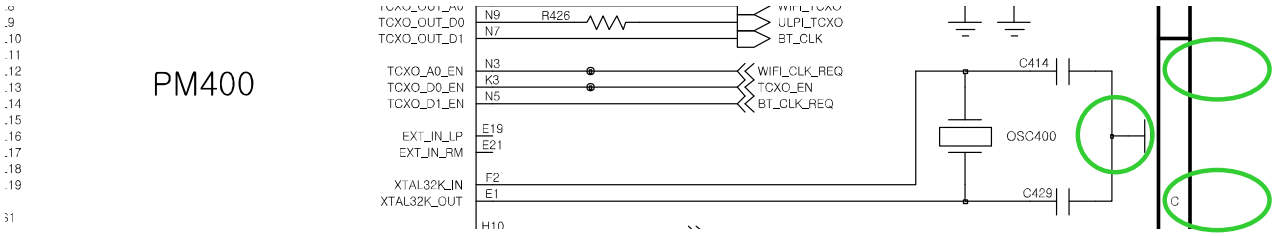

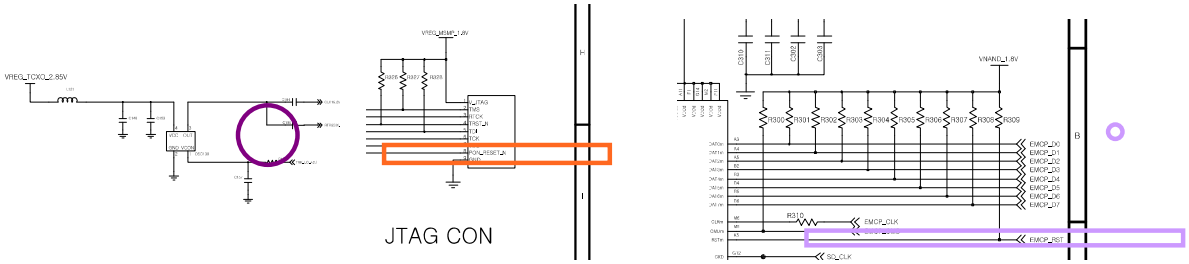

Confidential and proprietary-the contents in this service guide subject to change without prior notice.
Distribution, transmission, or infringement of any content or data from this document without Samsung's written authorization is strictly prohibited.

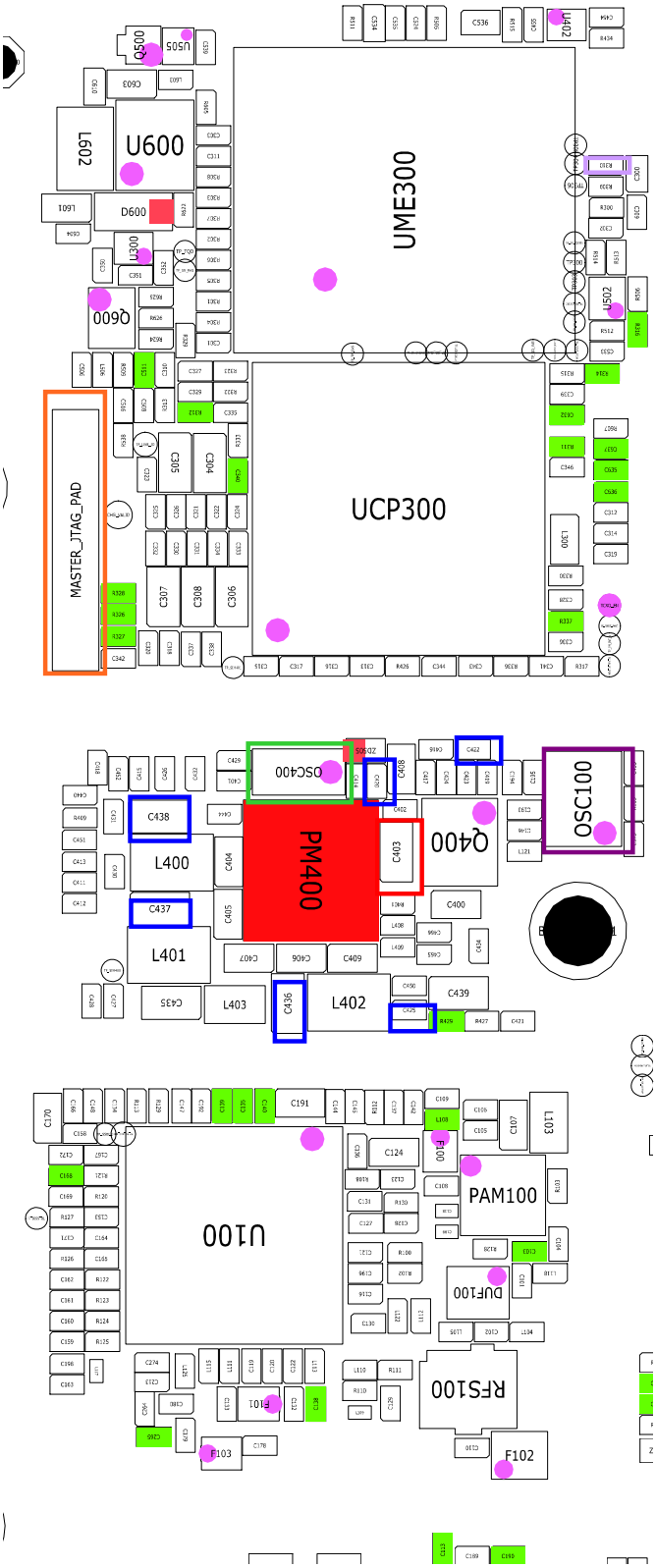

Confidential and proprietary-the contents in this service guide subject to change without prior notice.
Distribution, transmission, or infringement of any content or data from this document without Samsung's written authorization is strictly prohibited.

8-2. Charging Part

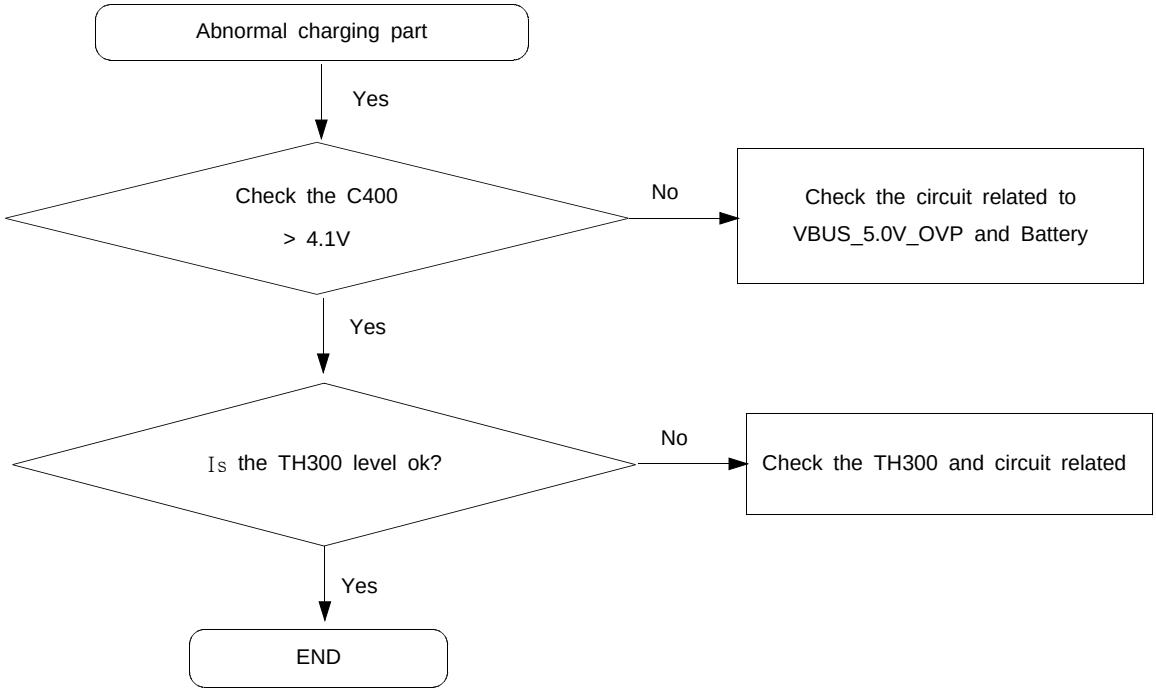

Confidential and proprietary-the contents in this service guide subject to change without prior notice.
Distribution, transmission, or infringement of any content or data from this document without Samsung's written authorization is strictly prohibited.

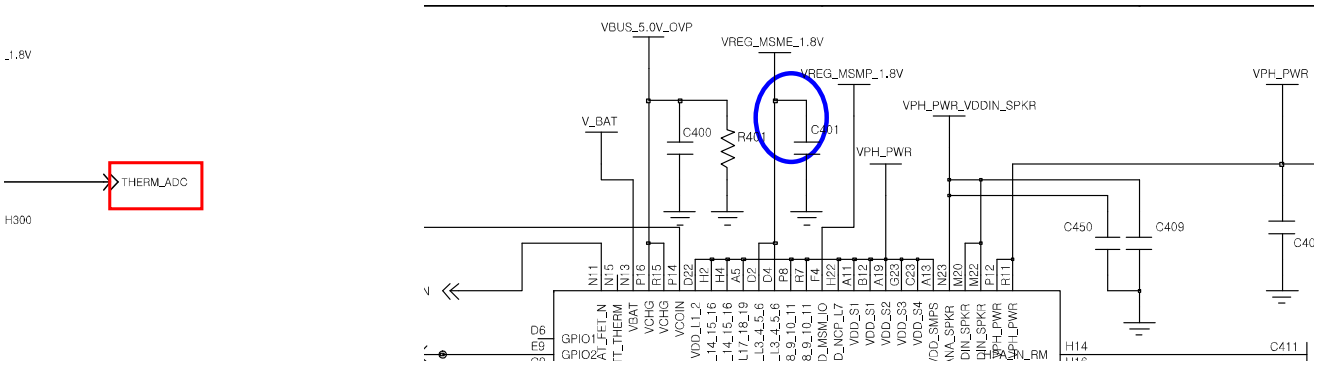

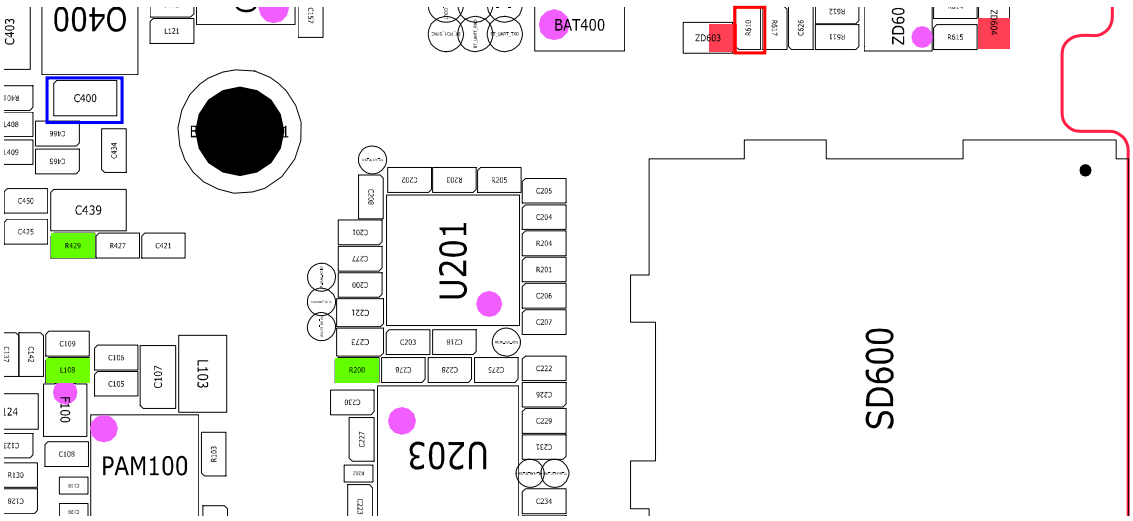

Confidential and proprietary-the contents in this service guide subject to change without prior notice.
Distribution, transmission, or infringement of any content or data from this document without Samsung's written authorization is strictly prohibited.

8-3. UIM Part

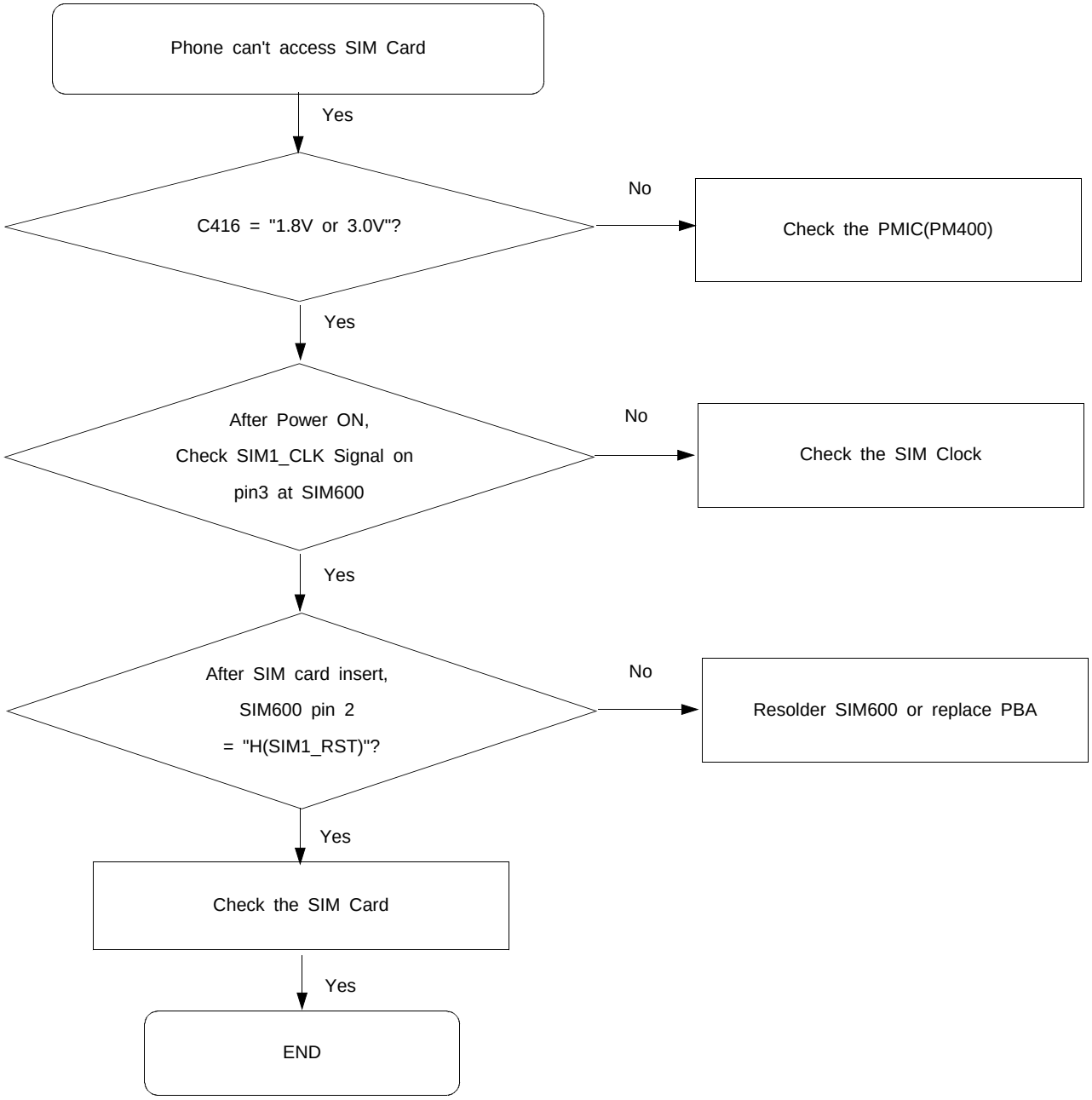

Confidential and proprietary-the contents in this service guide subject to change without prior notice.
Distribution, transmission, or infringement of any content or data from this document without Samsung's written authorization is strictly prohibited.

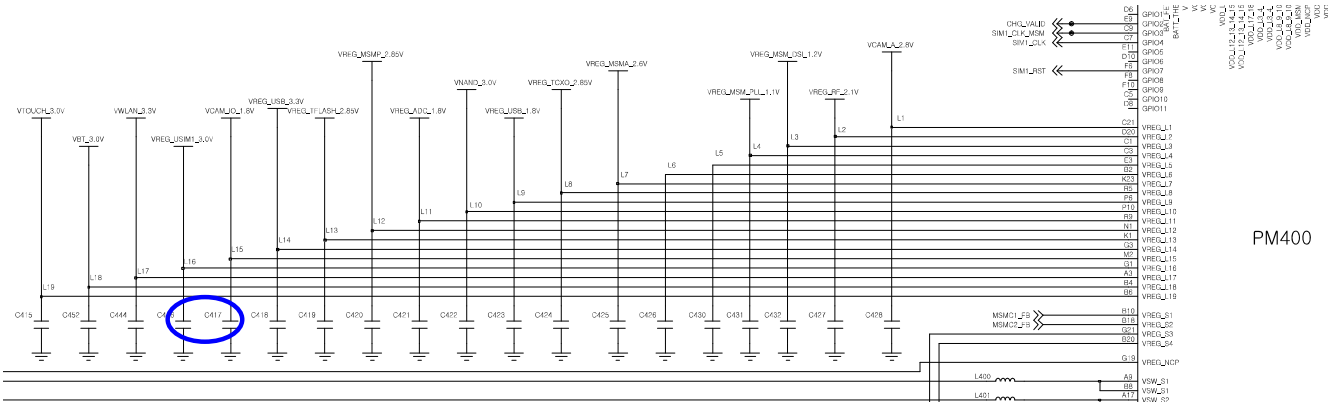

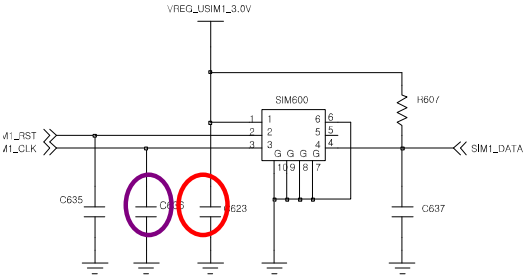

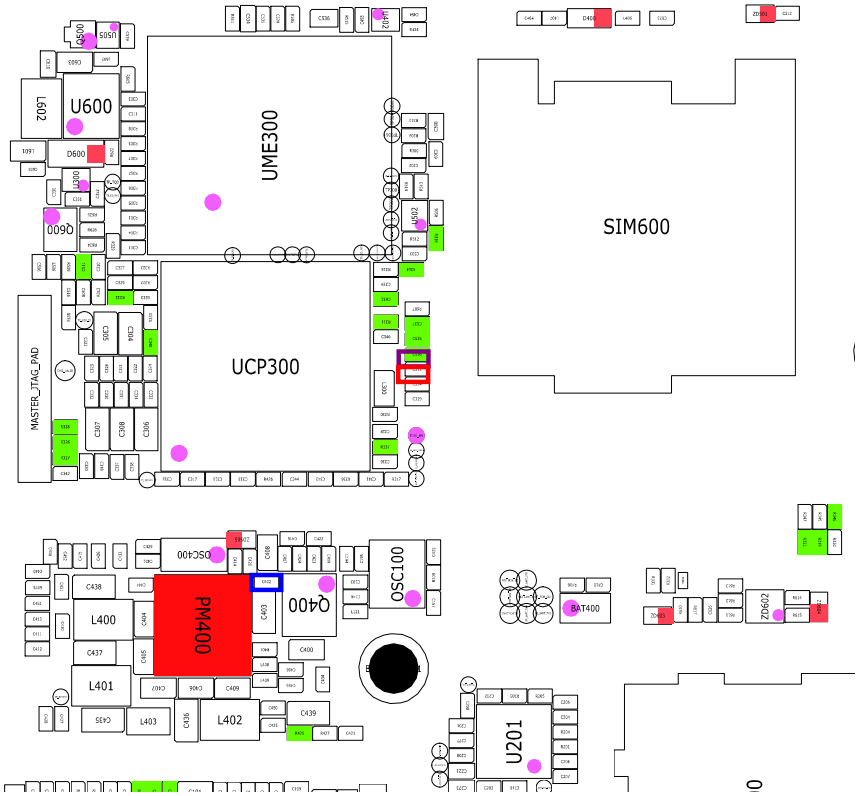

Confidential and proprietary-the contents in this service guide subject to change without prior notice.
Distribution, transmission, or infringement of any content or data from this document without Samsung's written authorization is strictly prohibited.

8-4. Speaker Part

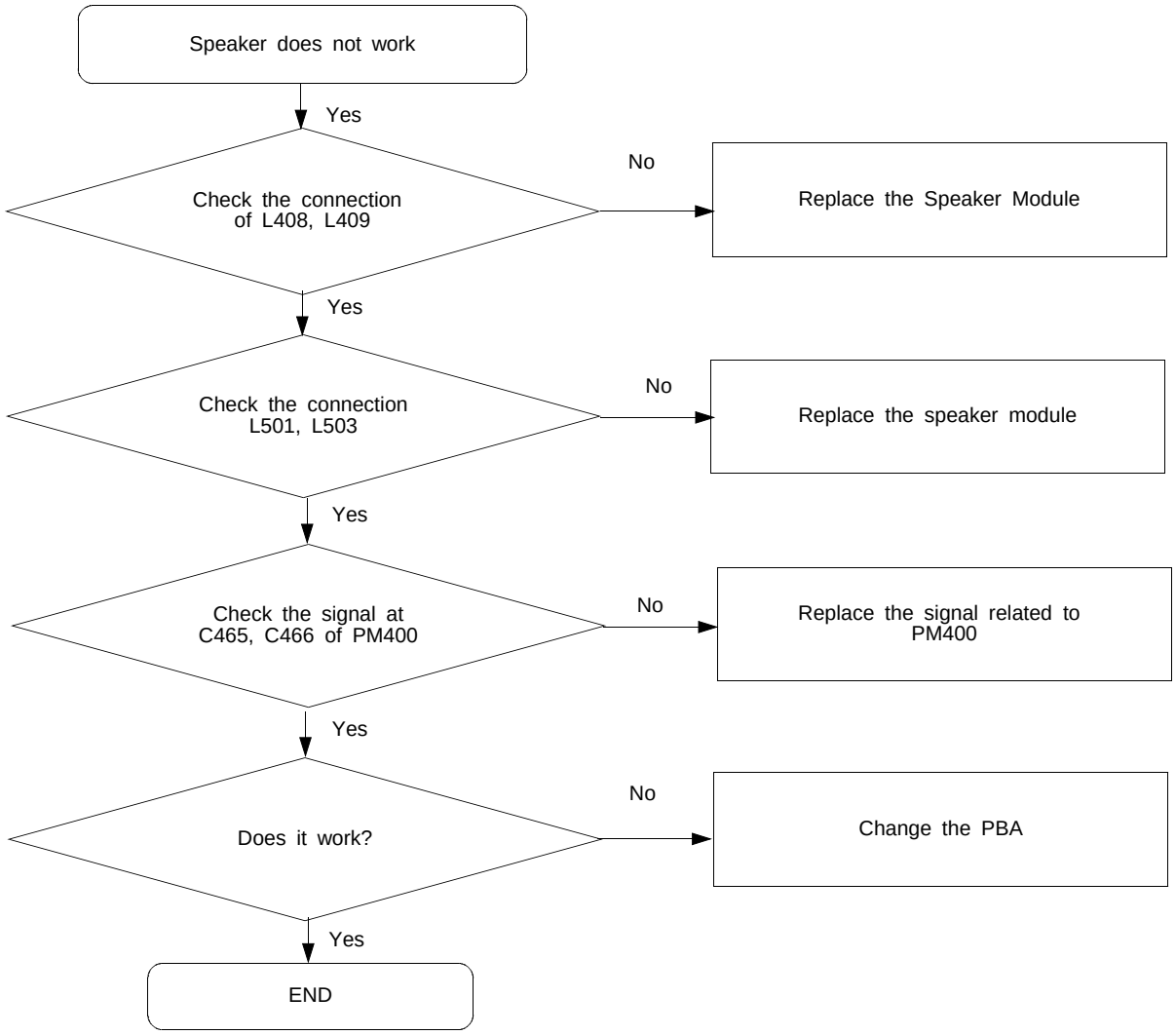

Confidential and proprietary-the contents in this service guide subject to change without prior notice.
Distribution, transmission, or infringement of any content or data from this document without Samsung's written authorization is strictly prohibited.

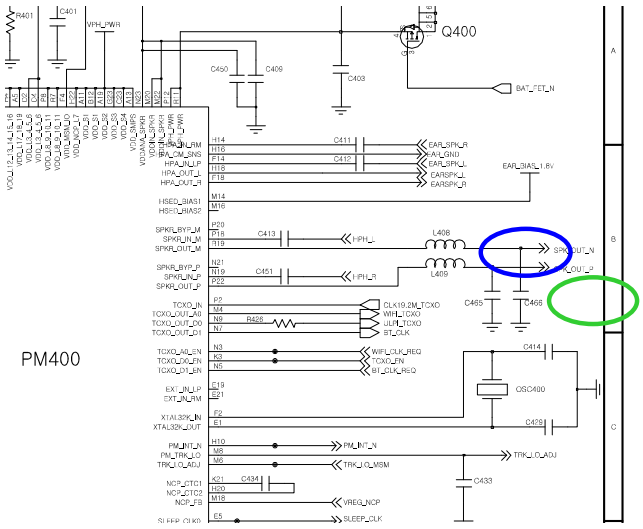

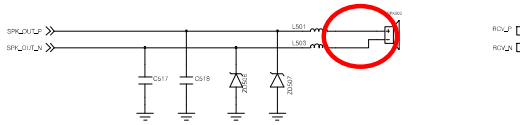

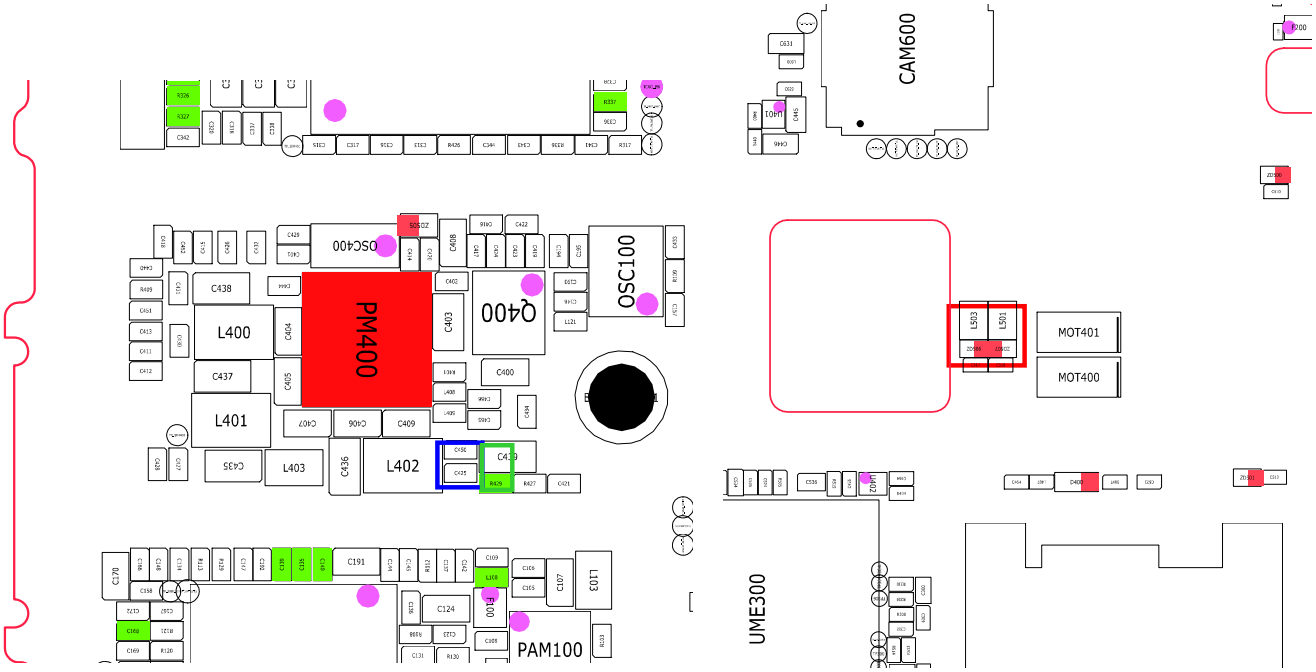

Confidential and proprietary-the contents in this service guide subject to change without prior notice.
Distribution, transmission, or infringement of any content or data from this document without Samsung's written authorization is strictly prohibited.

8-5. Back Light

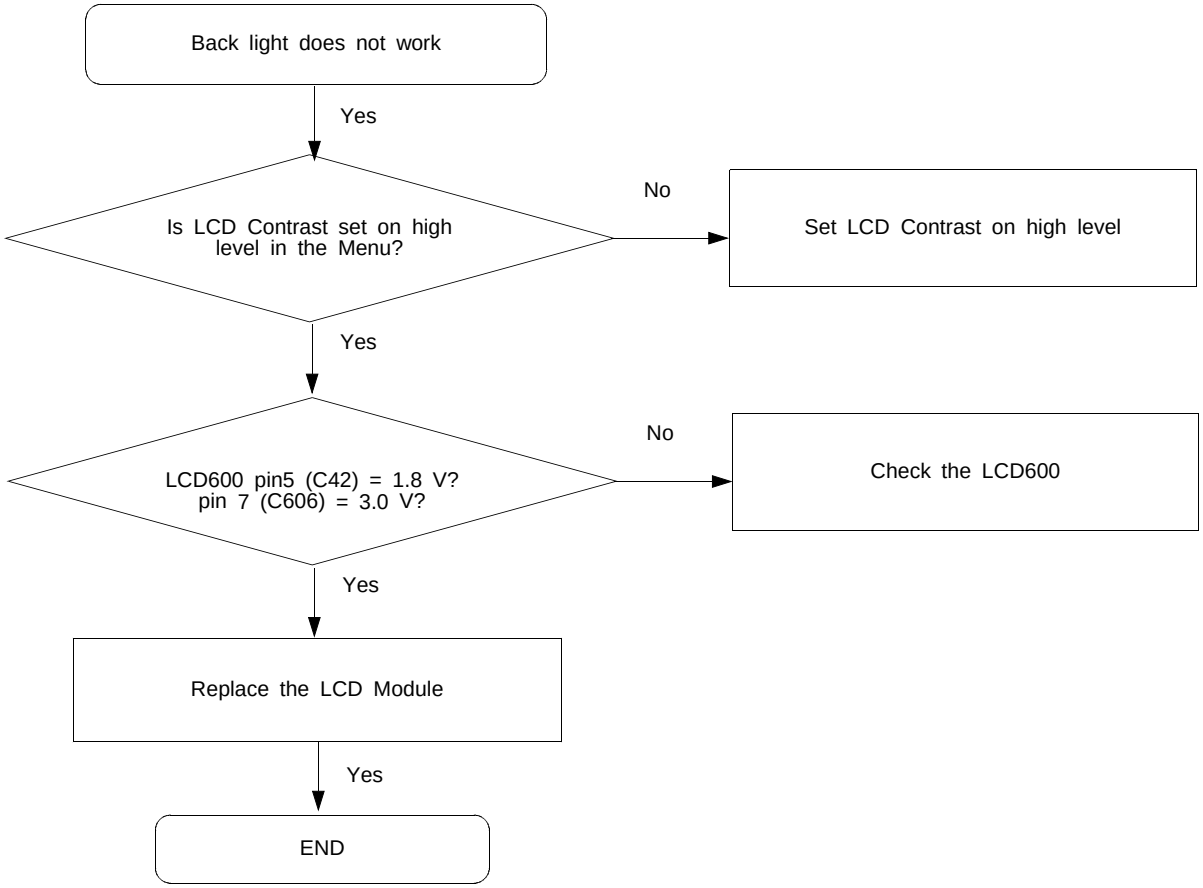

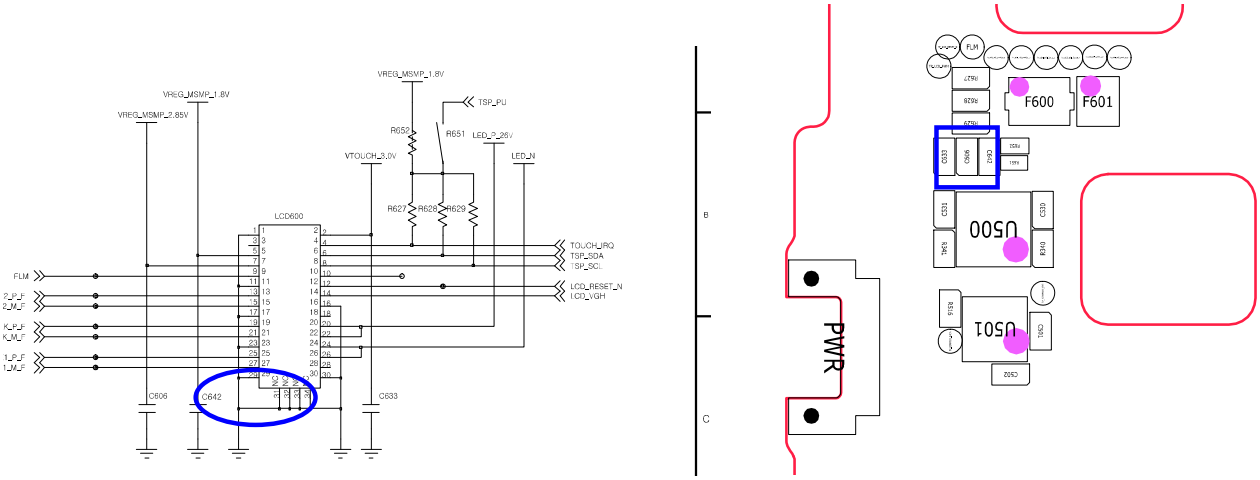

Confidential and proprietary-the contents in this service guide subject to change without prior notice.
Distribution, transmission, or infringement of any content or data from this document without Samsung's written authorization is strictly prohibited.

8-6. Camera Part(3M Camear)

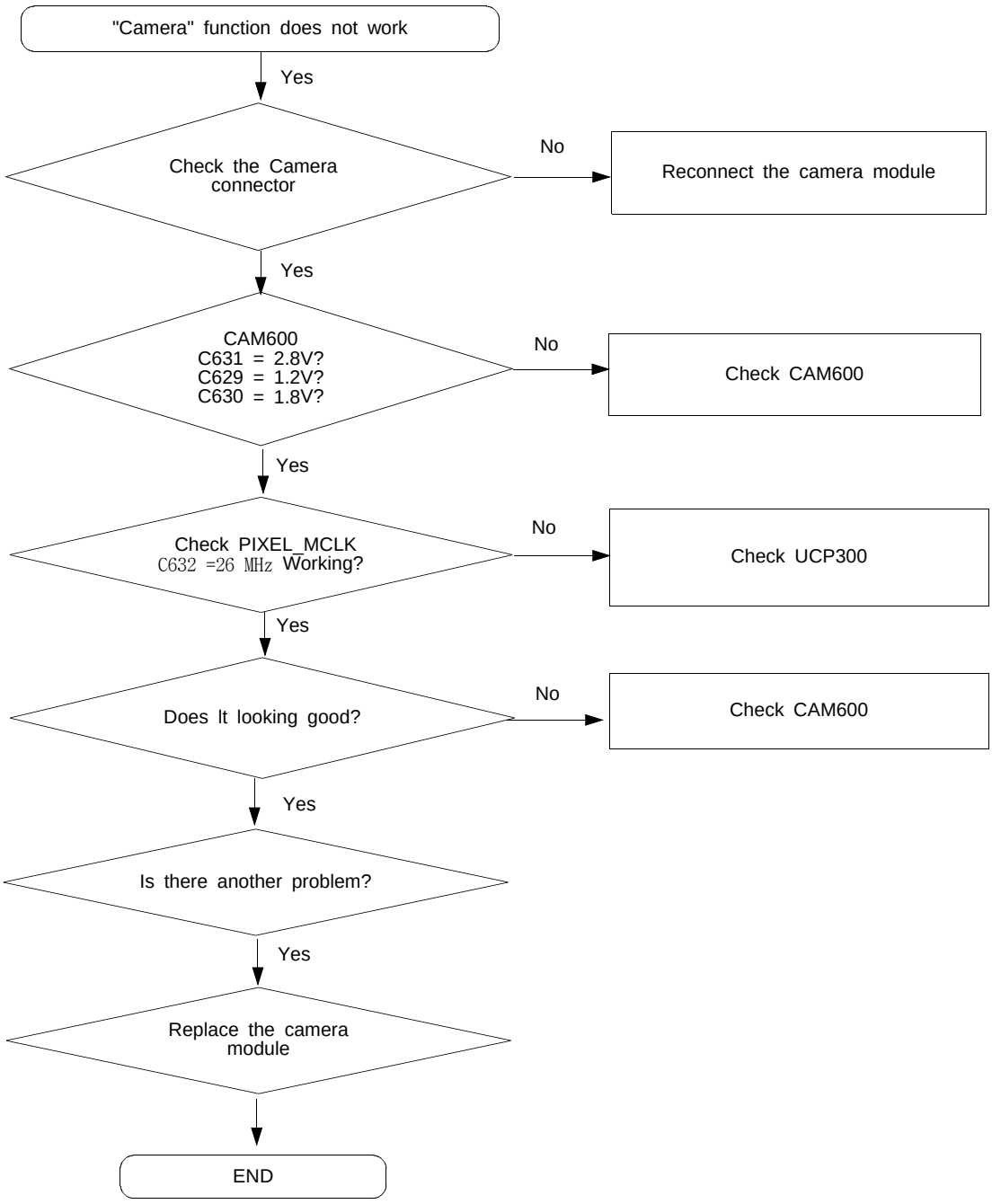

Confidential and proprietary-the contents in this service guide subject to change without prior notice.
Distribution, transmission, or infringement of any content or data from this document without Samsung's written authorization is strictly prohibited.

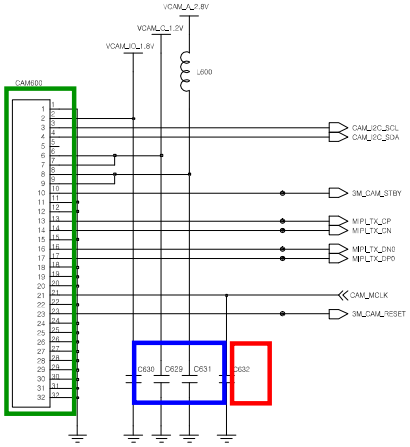

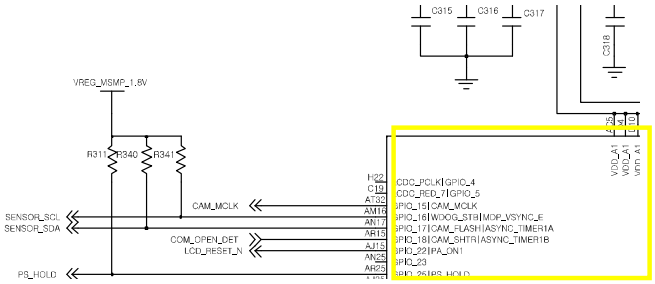

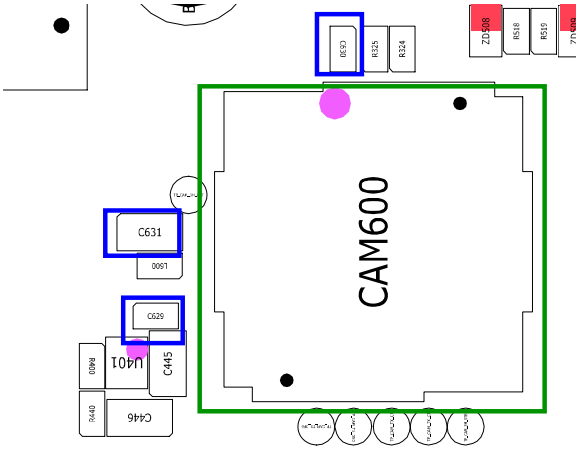

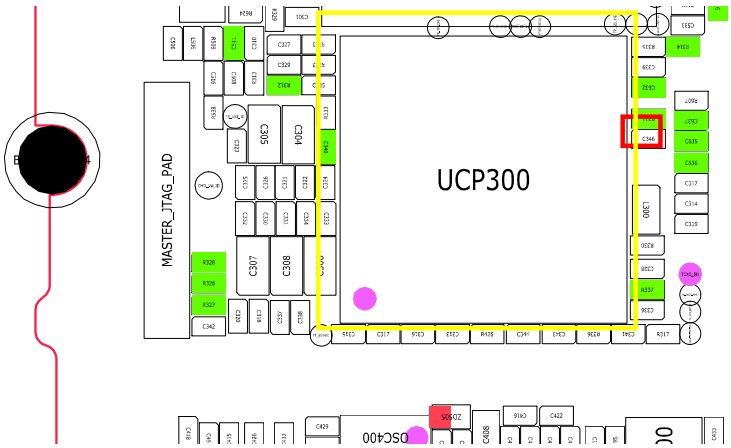

Confidential and proprietary-the contents in this service guide subject to change without prior notice.
Distribution, transmission, or infringement of any content or data from this document without Samsung's written authorization is strictly prohibited.

8-7. CDMA RX

1. Visual check! (Antenna Contact)
2, SMD COMPONENT CHECK
(RTR6500, F1003, DUP1000, F1002
3. OSC100(Main Clock) Check : 19.2MHz
4, CHECK RX0_2.1V, RX1_2.1V
RF Channel : 363
Cell power : -75dBm

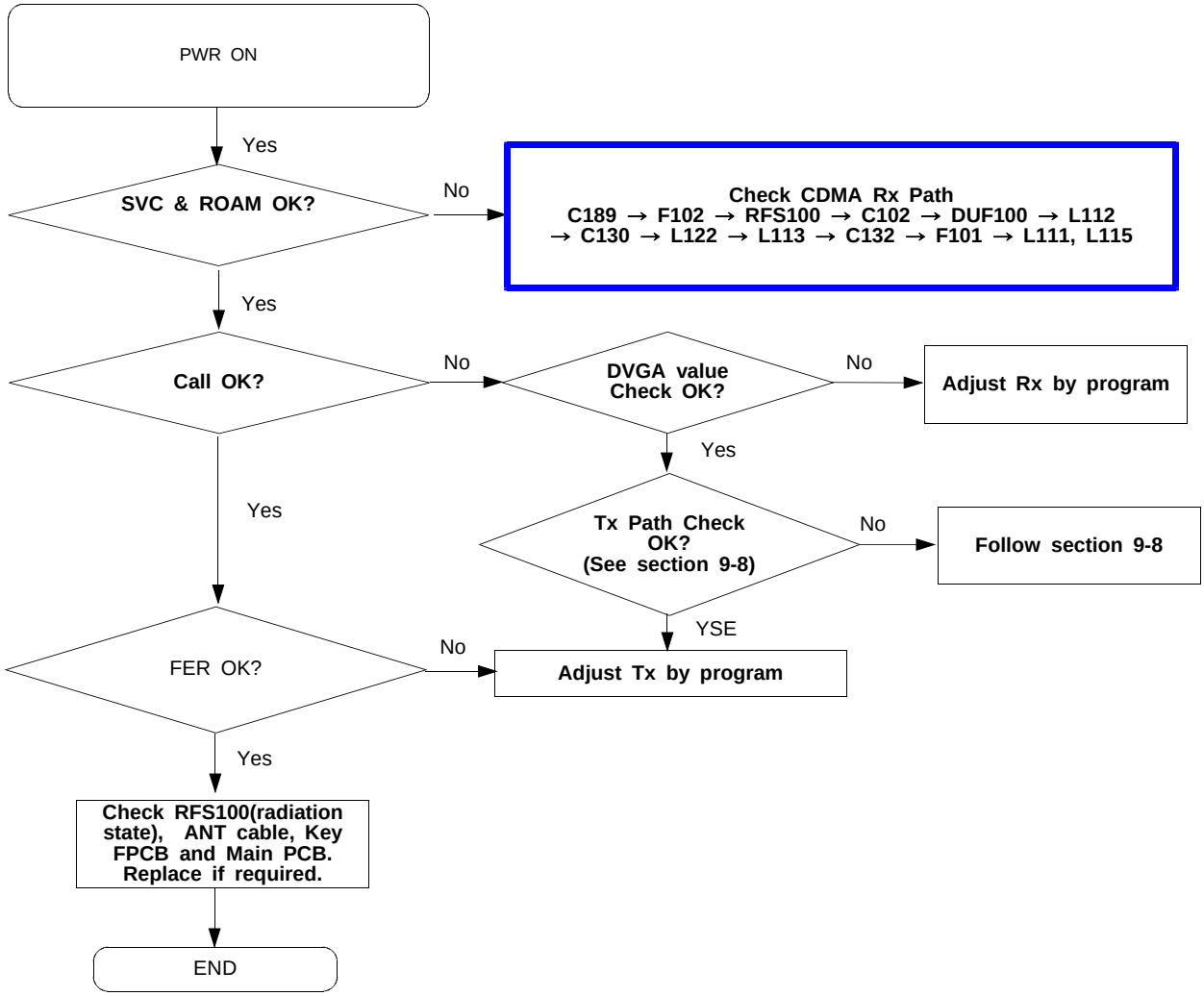

Confidential and proprietary-the contents in this service guide subject to change without prior notice.
Distribution, transmission, or infringement of any content or data from this document without Samsung's written authorization is strictly prohibited.

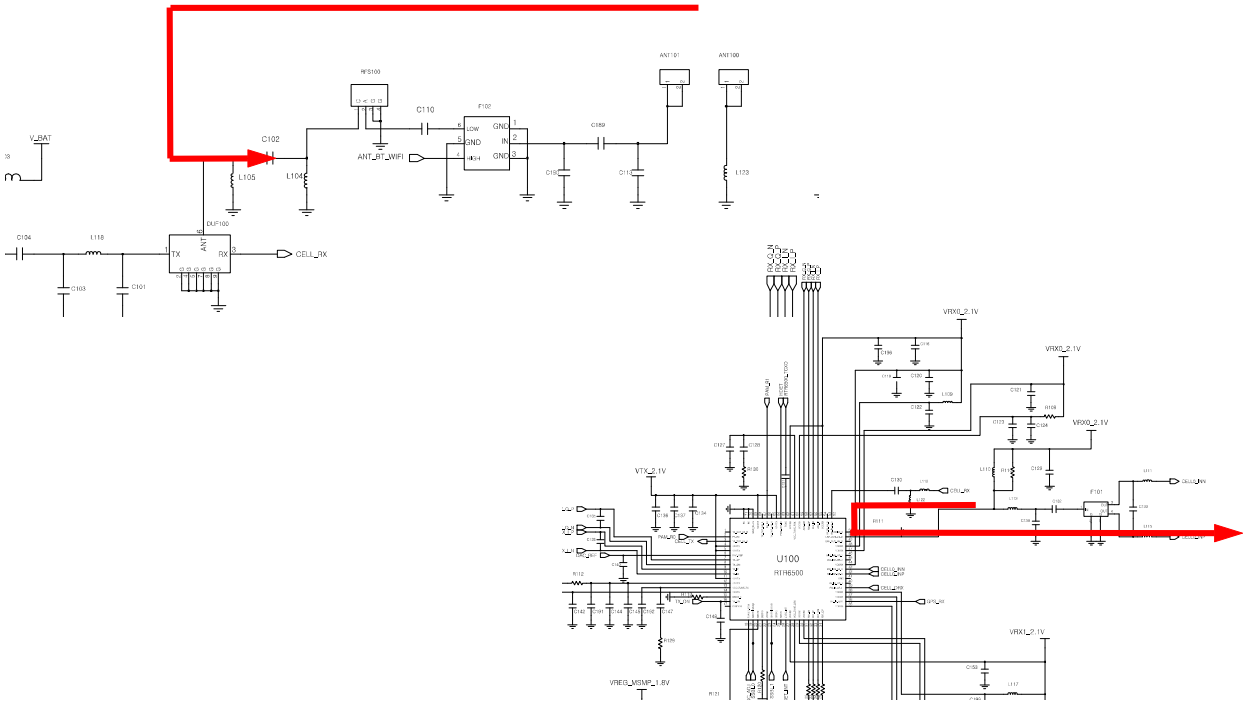

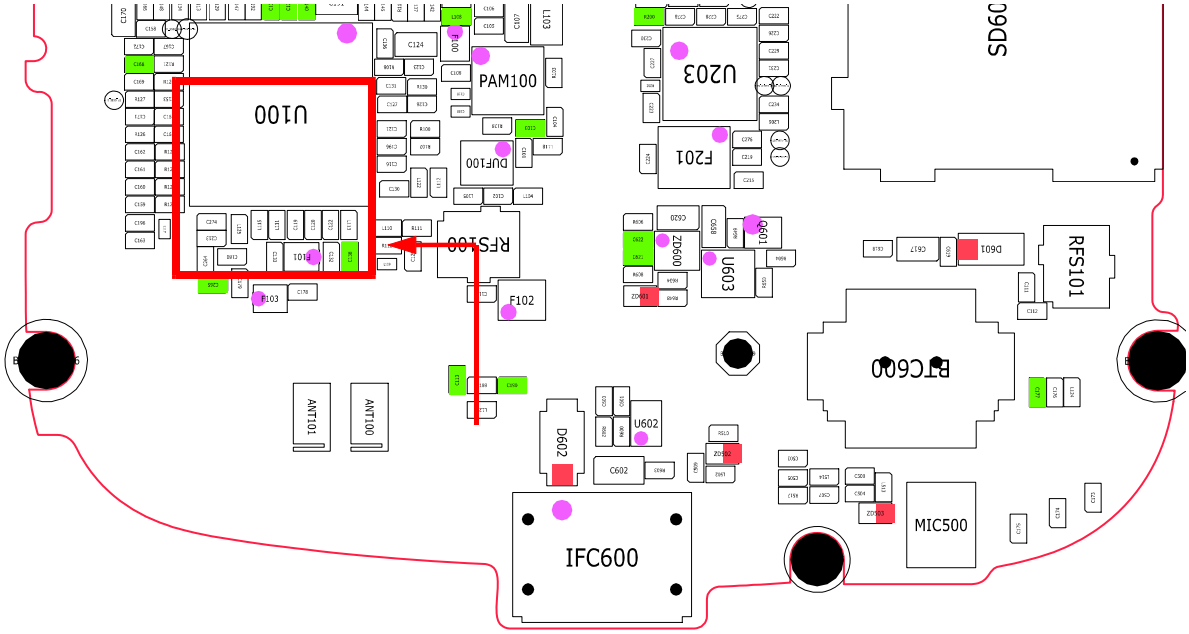

Confidential and proprietary-the contents in this service guide subject to change without prior notice.
Distribution, transmission, or infringement of any content or data from this document without Samsung's written authorization is strictly prohibited.

8-8. CDMA TX

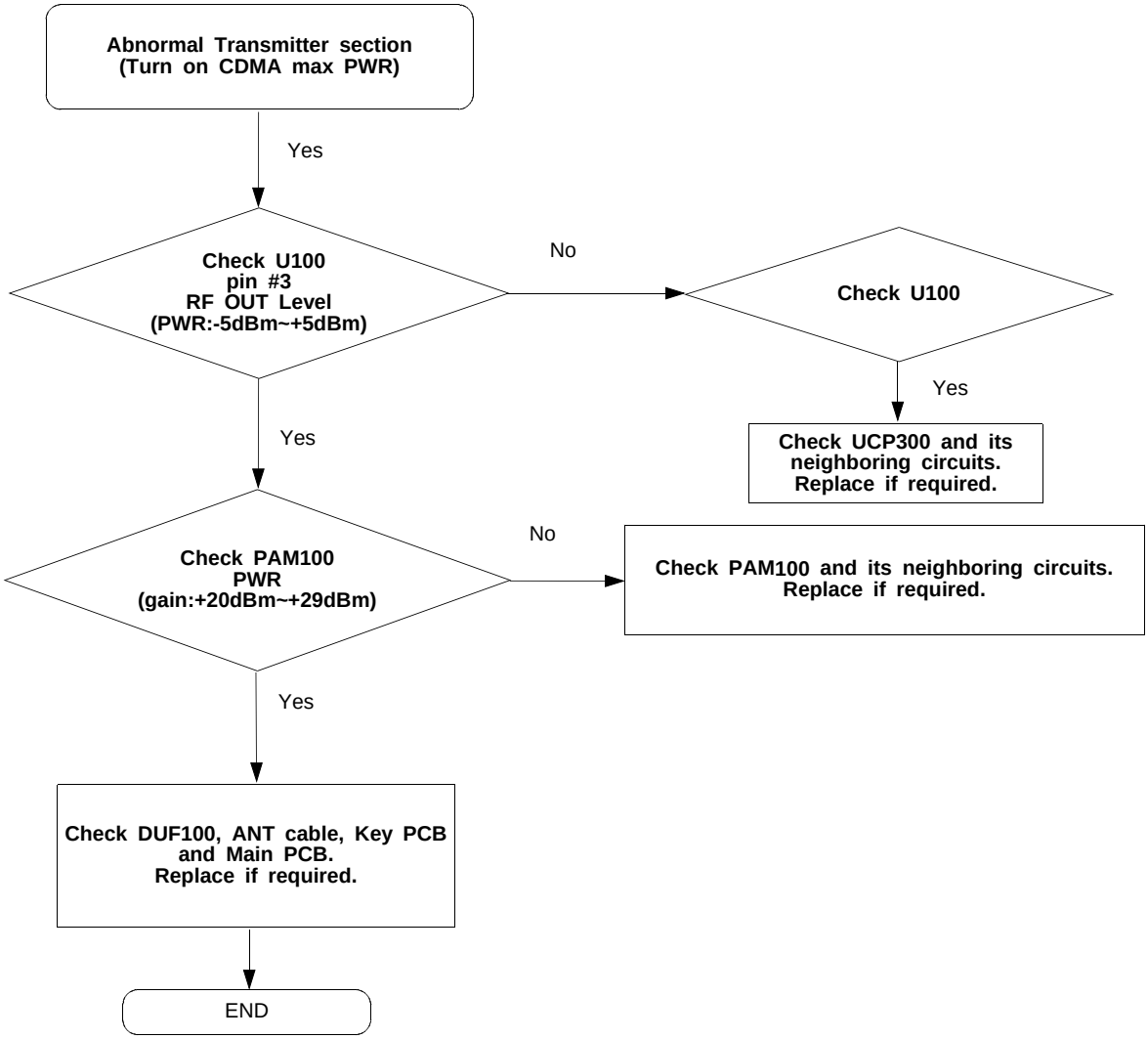

Confidential and proprietary-the contents in this service guide subject to change without prior notice.
Distribution, transmission, or infringement of any content or data from this document without Samsung's written authorization is strictly prohibited.

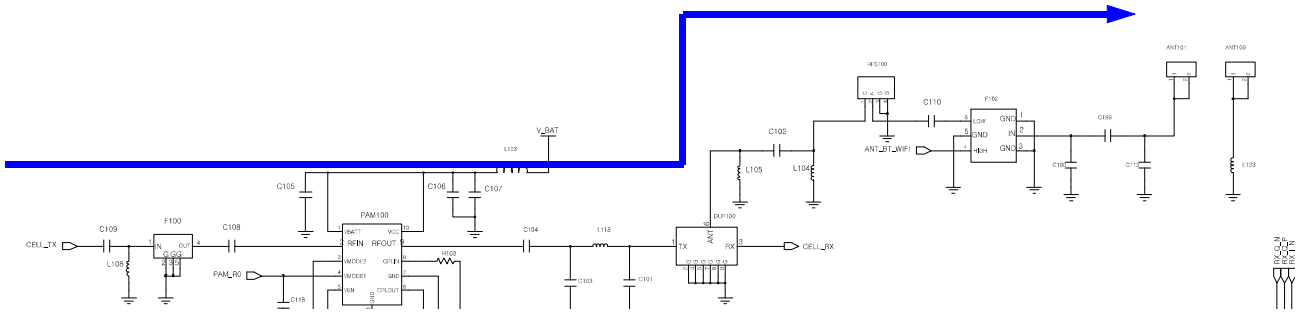

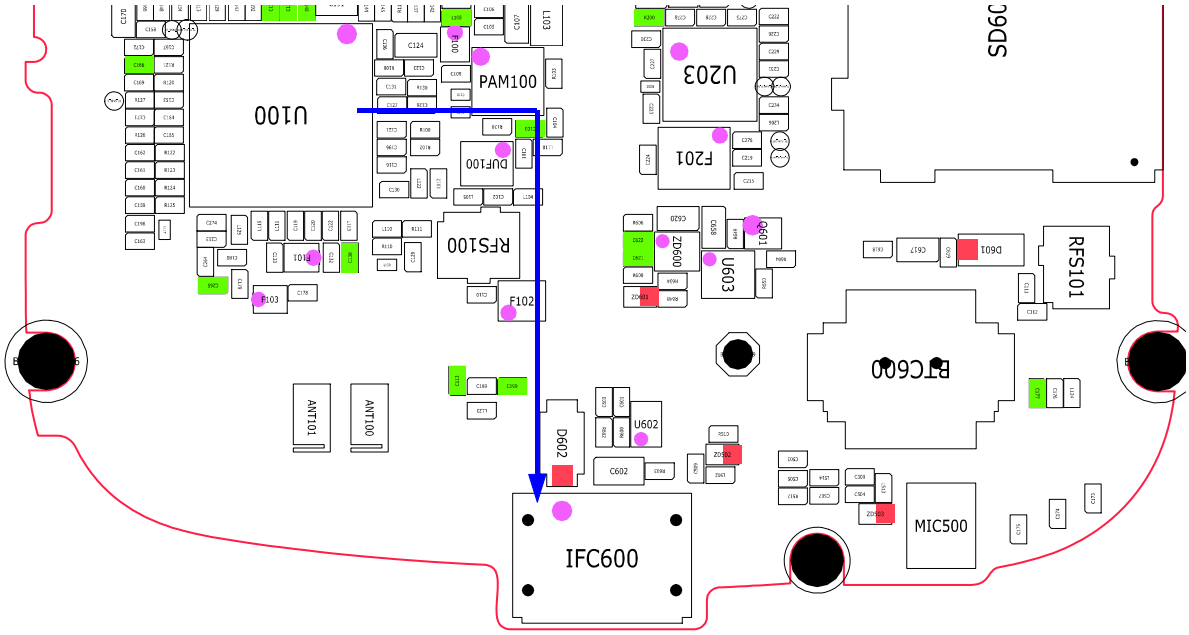

Confidential and proprietary-the contents in this service guide subject to change without prior notice.
Distribution, transmission, or infringement of any content or data from this document without Samsung's written authorization is strictly prohibited.

8-9. GPS Part

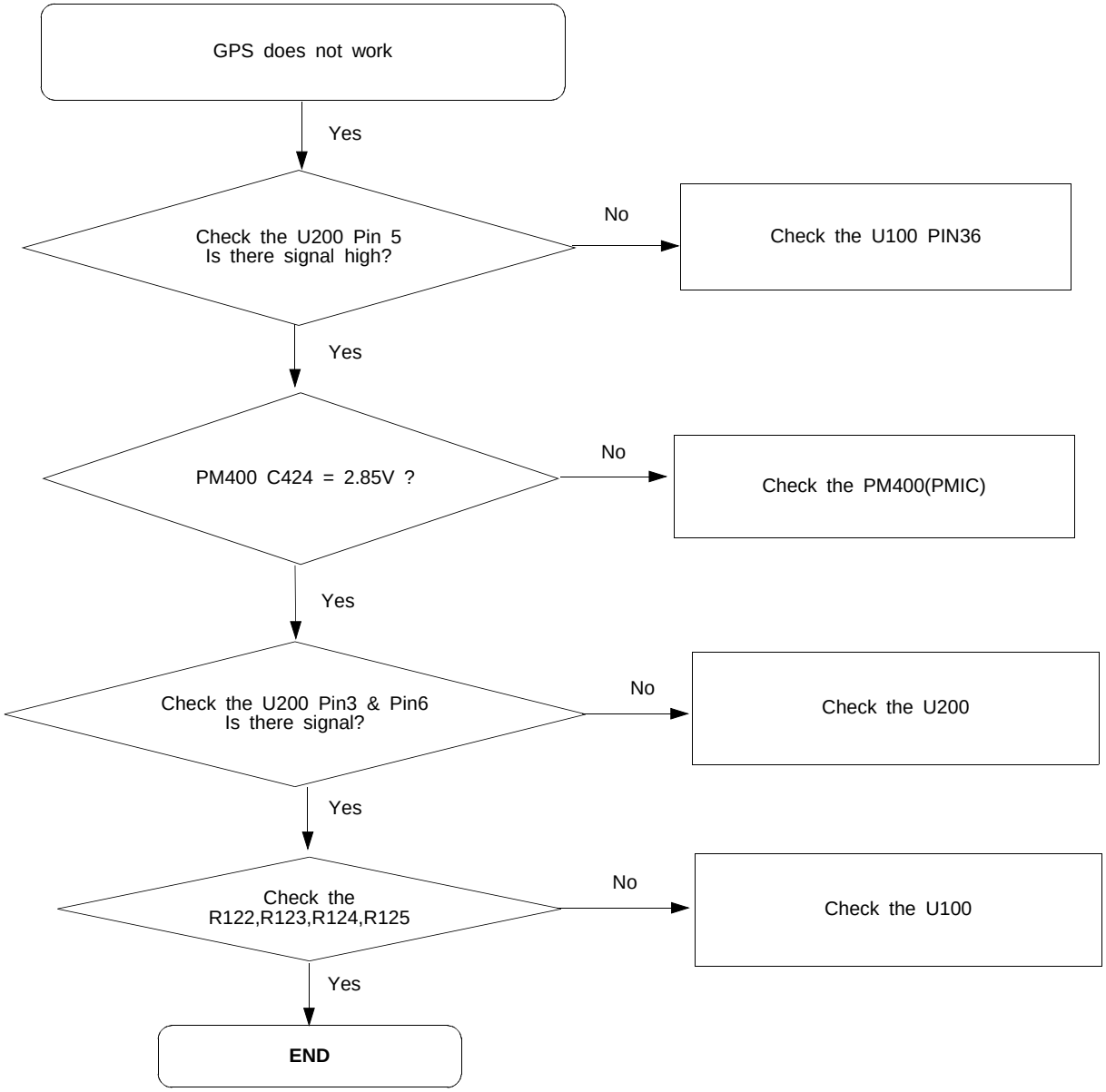

Confidential and proprietary-the contents in this service guide subject to change without prior notice.
Distribution, transmission, or infringement of any content or data from this document without Samsung's written authorization is strictly prohibited.

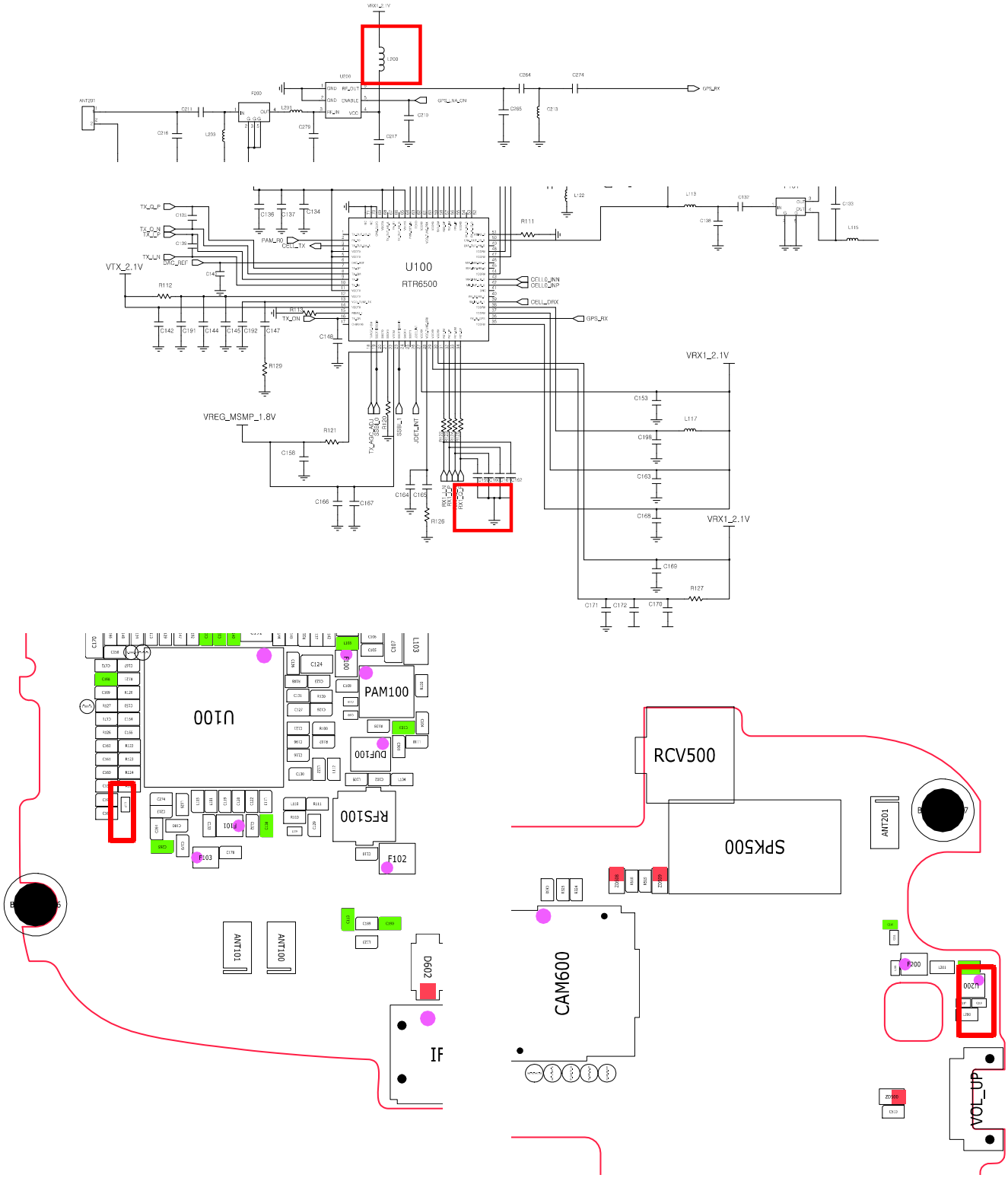

Confidential and proprietary-the contents in this service guide subject to change without prior notice.
Distribution, transmission, or infringement of any content or data from this document without Samsung's written authorization is strictly prohibited.

8-10. BLUETOOTH / WLAN

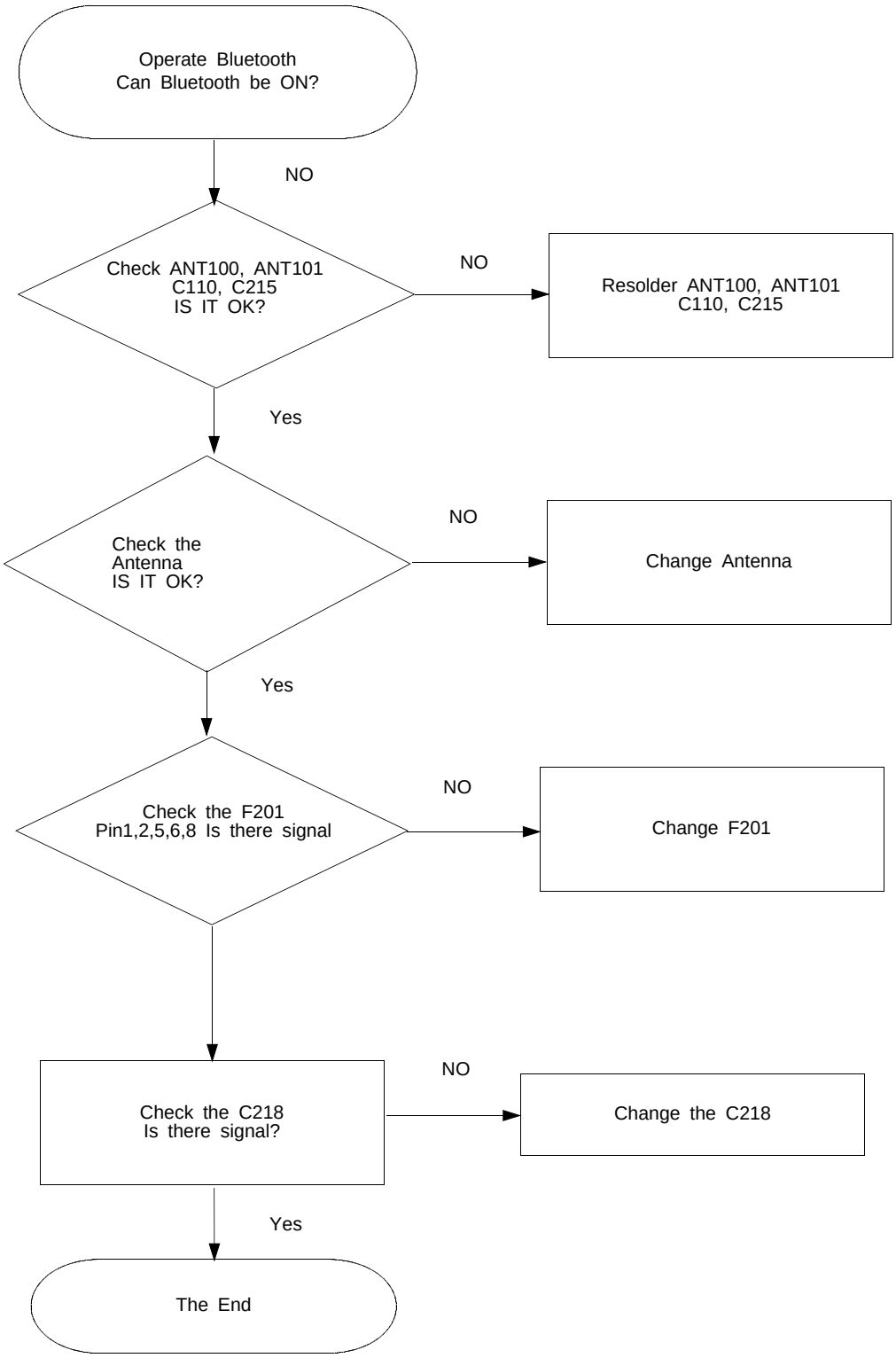

Confidential and proprietary-the contents in this service guide subject to change without prior notice.
Distribution, transmission, or infringement of any content or data from this document without Samsung's written authorization is strictly prohibited.

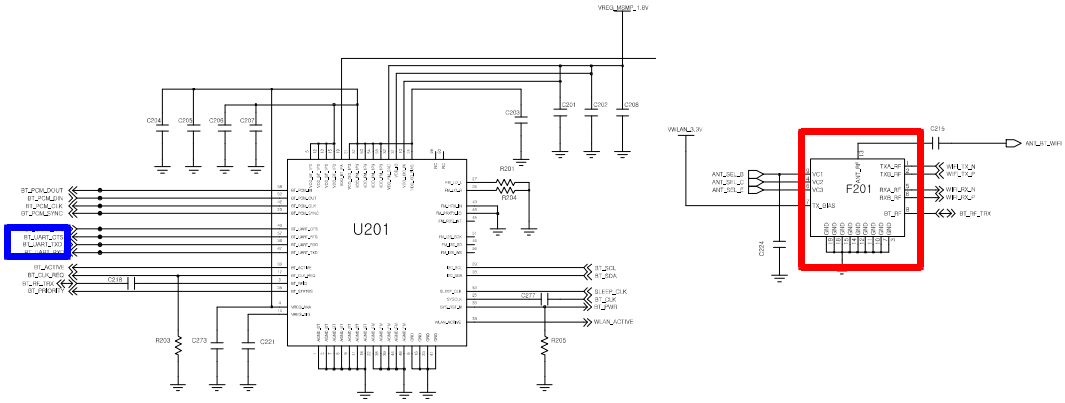

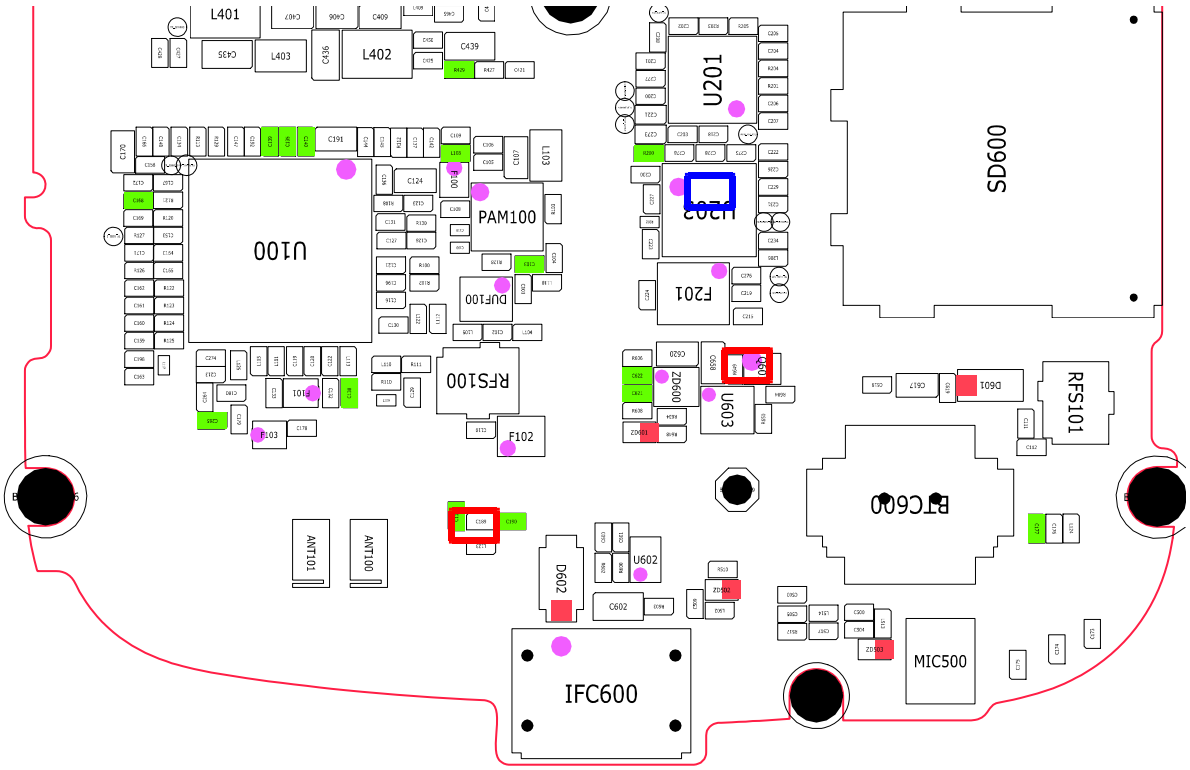

Confidential and proprietary-the contents in this service guide subject to change without prior notice.
Distribution, transmission, or infringement of any content or data from this document without Samsung's written authorization is strictly prohibited.

● : NC point

UCP300

↘	1	2	3	4	5	6	7	8	9	10	11	12	13	14	15	16	17	18	19	20	21	22	23	24	25	26	27	28	29	30	31	32	33	34	35	36
A	○	-	○	-	○	-	○	-	○	-	○	-	○	-	●	-	○	-	●	-	○	-	○	-	●	-	●	-	○	-	●	-	●	-	○	-
B	-	○	-	○	-	○	-	●	-	○	-	○	-	●	-	●	-	●	-	○	-	○	-	○	-	●	-	●	-	○	-	●	-	●	-	○
C	○	-	○	-	○	-	○	-	●	-	○	-	○	-	●	-	●	-	●	-	○	-	○	-	●	-	●	-	●	-	●	-	●	-	●	-
D	-	●	-	○	-	●	-	○	-	○	-	○	-	●	-	●	-	●	-	○	-	○	-	●	-	●	-	○	-	○	-	●	-	●	-	●
E	●	-	●	-	○	-	●	-	○	-	●	-	○	-	●	-	●	-	●	-	○	-	●	-	●	-	●	-	●	-	●	-	●	-	○	-
F	-	●	-	○	-	○	-	○	-	○	-	○	-	○	-	○	-	○	-	○	-	○	-	○	-	○	-	○	-	○	-	●	-	○	-	○
G	○	-	○	-	○	-	○	-	○	-	○	-	○	-	●	-	●	-	●	-	○	-	●	-	●	-	●	-	●	-	○	-	●	-	○	-
H	-	○	-	○	-	○	-	○	-	○	-	●	-	●	-	●	-	●	-	●	-	●	-	○	-	●	-	●	-	○	-	○	-	○	-	○
J	○	-	○	-	○	-	○	-	○	-	○	-	○	-	○	-	○	-	○	-	○	-	○	-	○	-	○	-	○	-	○	-	○	-	○	-
K	-	○	-	○	-	○	-	○	-	○	-	○	-	○	-	○	-	○	-	○	-	○	-	○	-	○	-	○	-	○	-	○	-	○	-	○
L	○	-	○	-	○	-	○	-	○	-	○	-	○	-	○	-	○	-	○	-	○	-	○	-	○	-	○	-	○	-	○	-	○	-	○	-
M	-	○	-	○	-	○	-	○	-	○	-	○	-	○	-	○	-	○	-	○	-	○	-	○	-	○	-	○	-	○	-	○	-	○	-	○
N	○	-	○	-	●	-	○	-	○	-	○	-	○	-	○	-	○	-	○	-	○	-	○	-	○	-	○	-	○	-	○	-	○	-	○	-
P	-	○	-	○	-	○	-	○	-	○	-	○	-	○	-	○	-	○	-	○	-	○	-	○	-	○	-	○	-	○	-	○	-	○	-	○
R	○	-	○	-	○	-	○	-	○	-	○	-	○	-	○	-	○	-	○	-	○	-	○	-	○	-	○	-	○	-	○	-	○	-	○	-
T	-	●	-	○	-	○	-	○	-	○	-	○	-	○	-	○	-	○	-	○	-	○	-	○	-	○	-	○	-	○	-	○	-	○	-	○
U	○	-	●	-	●	-	○	-	○	-	○	-	○	-	○	-	○	-	○	-	○	-	○	-	○	-	○	-	○	-	○	-	○	-	○	-
V	-	○	-	●	-	○	-	○	-	○	-	○	-	○	-	○	-	○	-	○	-	○	-	○	-	○	-	○	-	○	-	○	-	○	-	○
W	○	-	○	-	○	-	○	-	○	-	○	-	○	-	○	-	○	-	○	-	○	-	○	-	○	-	○	-	○	-	○	-	○	-	○	-
Y	-	○	-	○	-	○	-	○	-	○	-	○	-	○	-	○	-	○	-	○	-	○	-	○	-	○	-	○	-	○	-	○	-	○	-	○
AA	○	-	○	-	○	-	○	-	○	-	○	-	○	-	○	-	○	-	○	-	○	-	○	-	○	-	○	-	○	-	○	-	○	-	○	-
AB	-	○	-	○	-	○	-	○	-	○	-	○	-	○	-	○	-	○	-	○	-	○	-	○	-	○	-	○	-	○	-	○	-	○	-	○
AC	○	-	○	-	○	-	○	-	○	-	○	-	○	-	○	-	○	-	○	-	○	-	○	-	○	-	○	-	○	-	○	-	○	-	○	-
AD	-	○	-	○	-	○	-	●	-	○	-	○	-	○	-	○	-	○	-	○	-	○	-	○	-	○	-	○	-	○	-	○	-	○	-	○
AE	○	-	○	-	○	-	○	-	○	-	○	-	○	-	○	-	○	-	○	-	○	-	○	-	○	-	○	-	○	-	○	-	○	-	○	-
AF	-	○	-	○	-	○	-	○	-	○	-	○	-	○	-	○	-	○	-	○	-	○	-	○	-	○	-	○	-	○	-	○	-	○	-	○
AG	○	-	○	-	○	-	○	-	○	-	○	-	○	-	○	-	○	-	○	-	○	-	○	-	○	-	○	-	○	-	○	-	○	-	○	-
AH	-	●	-	●	-	○	-	○	-	○	-	○	-	○	-	○	-	○	-	○	-	○	-	○	-	○	-	○	-	○	-	○	-	○	-	○
AJ	●	-	○	-	○	-	○	-	○	-	○	-	●	-	○	-	○	-	○	-	○	-	○	-	○	-	○	-	●	-	○	-	○	-	○	-
AK	-	○	-	○	-	○	-	○	-	●	-	○	-	●	-	○	-	○	-	○	-	○	-	○	-	○	-	○	-	○	-	○	-	○	-	○
AL	○	-	○	-	○	-	○	-	○	-	○	-	○	-	○	-	○	-	○	-	○	-	○	-	○	-	○	-	○	-	○	-	○	-	○	-
AM	-	○	-	○	-	○	-	●	-	●	-	○	-	○	-	○	-	○	-	○	-	●	-	●	-	●	-	○	-	○	-	○	-	○	-	○
AN	○	-	○	-	○	-	○	-	○	-	○	-	●	-	○	-	○	-	○	-	○	-	●	-	●	-	●	-	○	-	○	-	○	-	○	-
AP	-	○	-	○	-	○	-	○	-	○	-	●	-	○	-	○	-	○	-	○	-	●	-	●	-	○	-	○	-	○	-	○	-	○	-	○
AR	○	-	○	-	○	-	○	-	○	-	○	-	○	-	○	-	○	-	○	-	○	-	●	-	○	-	○	-	○	-	○	-	○	-	○	-
AT	-	○	-	○	-	○	-	●	-	○	-	●	-	●	-	○	-	○	-	○	-	●	-	○	-	○	-	○	-	○	-	○	-	●	-	○

Confidential and proprietary-the contents in this service guide subject to change without prior notice.
Distribution, transmission, or infringement of any content or data from this document without Samsung's written authorization is strictly prohibited.

PM400

	1/2	3/4	5/6	7/8	9/10	11/12	13/14	15/16	17/18	19/20	21/22	23/24
A	○	○	○	○	○	○	○	○	○	○	○	○
B	○	○	○	○	○	○	○	○	○	○	○	○
C	○	○	●	○	○	○	○	○	○	○	○	○
D	○	○	●	●	●	○	○	●	●	○	○	○
E	○	○	○	○	○	●	○	○	○	●	●	○
F	○	○	○	●	●	○	○	○	○	○	○	○
G	○	○	○	○	○	○	○	○	○	○	○	○
H	○	○	○	○	○	○	○	○	○	○	○	○
K	○	○	○	○	○	○	○	○	○	○	○	○
M	○	○	○	○	○	○	○	●	○	○	○	○
N	○	○	○	○	○	○	○	●	○	○	●	○
P	○	○	○	○	○	○	○	○	○	●	○	○
R	○	○	○	○	○	○	●	○	●	○	○	○

UME300

	1	2	3	4	5	6	7	8	9	10	11	12	13	14
A	●	●	○	○	○	●	●	○	○	○	○	○	●	●
B	●	○	○	○	○	○	○	○	○	○	○	○	○	●
C	○	○	○	○	●	○	○	○	○	○	○	○	○	○
D	○	○	○									○	○	○
E	○	○	○		●	○	○	●	●	●		○	○	○
F	○	○	○		○					●		○	○	○
G	○	○	○		○					●		○	○	○
H	○	○	○		●					○		○	○	○
J	○	○	○		●					○		○	○	○
K	○	○	○		○	●	●	○	○	●		○	○	○
L	○	○	○									○	○	○
M	○	○	○	○	○	○	○	○	○	○	○	○	○	○
N	●	○	○	○	○	○	○	○	○	○	○	○	○	●
P	●	●	○	○	○	○	●	○	○	●	○	○	●	●

Confidential and proprietary-the contents in this service guide subject to change without prior notice.
Distribution, transmission, or infringement of any content or data from this document without Samsung's written authorization is strictly prohibited.